REV.	PART NO.
	H2853A

CRANE WILL BE SIGNIFICANTLY DERATED IN FRONT SECTORS. ACTUAL DERATING SHALL BE BASED ON PHYSICAL TESTING.

*** PERMIT REQUIRED ***

GROSS WEIGHT OF CHASSIS MAY EXCEED MAXIMUM GROSS WEIGHT ALLOWED WITH NO PAYLOAD AND FULL FUEL TANKS.

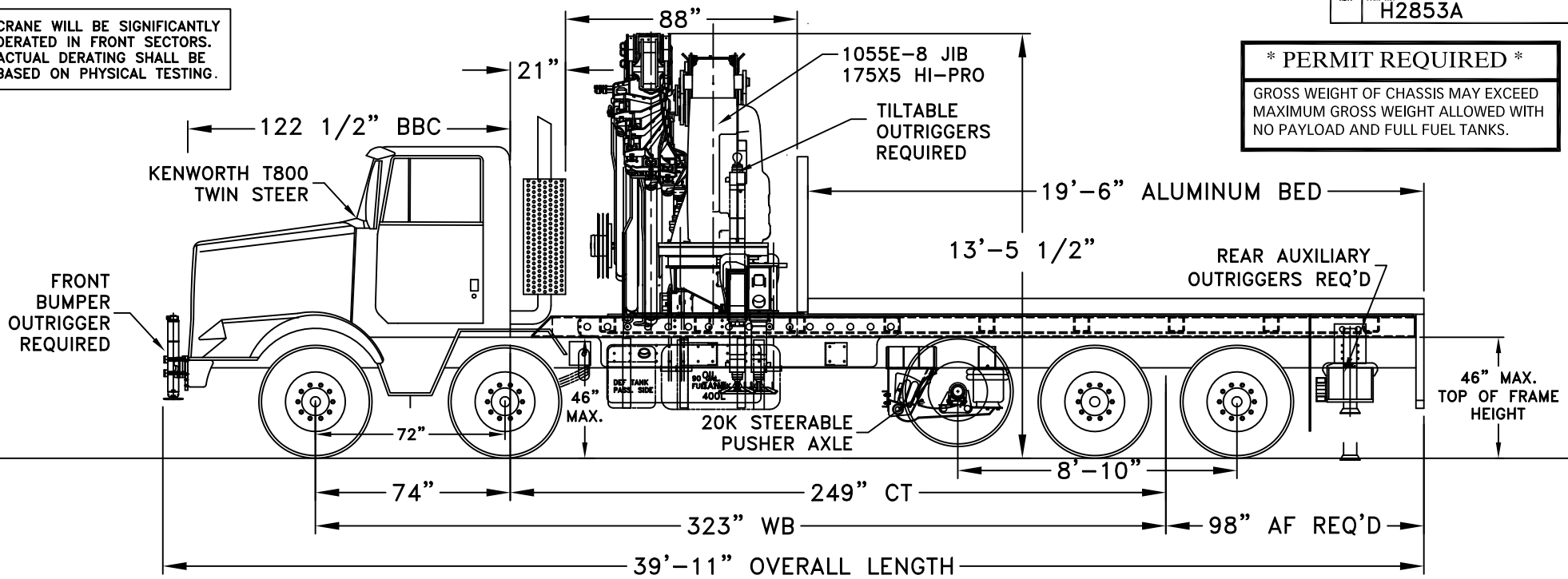

TRUCK, HIAB CRANE & ACCESSORY WEIGHT DISTRIBUTION NO PAYLOAD, LIFT AXLE DOWN.	
FRONT AXLE LOAD	= 30,670 LBS.
LIFT AXLE LOAD	= 12,000 LBS.
REAR AXLE LOAD	= 23,050 LBS.
FRONT AXLE PERCENTAGE	= 47 %
LIFT AXLE PERCENTAGE	= 18 %
REAR AXLE PERCENTAGE	= 35 %
GROSS VEHICLE WEIGHT	= 65,720 LBS.

TRUCK SPECIFICATIONS	
TRUCK MODEL	= KW T800 TWIN STEER
WHEELBASE	= 323"
CAB TO TANDEM	= 249"
AXLE-TO-FRAME	= 98"
FRONT AXLE CURB WEIGHT	= 14,633 LBS.
REAR AXLE CURB WEIGHT	= 9,898 LBS.
FRONT G.A.W.R.	= 40,000 LBS.
REAR G.A.W.R.	= 52,000 LBS.
YIELD STRENGTH OF EACH FRAME RAIL	MINIMUM SECTION MODULUS REQUIRED
120,000 P.S.I. YIELD	= 83.08 in.^3
MINIMUM RBM/RAIL = 9,970,000 IN-LBS	

NOTES:

TRIPLE FRAME CHASSIS REQUIRED, 120,000 PSI MINIMUM.
CHASSIS FRAME RAIL MIN. OF 46.5 SECTION MODULUS REQ'D.
FULL LENGTH SUB-FRAME REQUIRED:
8" x 4" x 1/2" RECT. TUBING (ON TOP OF RAIL)
6" x 6" x 1/2" RECT. TUBING (CROSSMEMBERS EVERY 3')
FULL LENGTH TOP PLATE & BOTTOM PLATE REQUIRED.
SUBFRAME AND AUX. OUTRIGGER WEIGHTS ESTIMATED.
CURB WEIGHTS WERE PROVIDED BY DEALER.

TRUCK RUNS IN NEW YORK STATE.
36,000 LBS. ALLOWED ON TANDEM STEERING AXLE.
36,000 LBS. ALLOWED ON REAR TANDEM AXLE.
42,500 LBS. ALLOWED ON TRIDEM AXLE GROUP.
66,000 LBS. ALLOWED FOR GROSS WEIGHT.
MAXIMUM LENGTH CANNOT EXCEED 40'.

NOTICE:

THIS WEIGHT DISTRIBUTION IS BASED ON ESTIMATED WEIGHTS AND IS ONLY AS ACCURATE AS THOSE ESTIMATES. ACTUAL WEIGHTS MAY CHANGE THE RESULTS OF THIS WEIGHT DISTRIBUTION.

NOTICE:

THE DRAWING PURPOSE IS TO INTRODUCE A GENERAL CONCEPT OF A PROPOSED IDEA.

Hiab, Inc.

Hiab, Inc.
12233 Williams Road
Perrysburg, Ohio 43551
Tel (419) 482-6000
Fax (419) 482-6001

Tolerance - unless otherwise noted. Tolerances are in inches
2-PLACE ±.00..... .03
3-PLACE ±.000.... .015
ANGULAR ± .....1°
FRACTIONAL ± .....1/16"
Break all sharp corners unless otherwise specified.

THIS PROPERTY AND ALL INFORMATION THEREIN IS THE PROPERTY OF HIAB, INC., 12233 WILLIAMS RD, PERRYSBURG, OHIO 43551 AND IS CONFIDENTIAL. IT MUST NOT BE MADE PUBLIC OR COPIED. THIS DRAWING IS LOANED TO RETURN UPON DEMAND AND SHALL NOT BE USED DIRECTLY OR INDIRECTLY IN ANY WAY DETRIMENTAL TO OUR INTERESTS. OUR PRIOR SPECIFIC APPROVAL IS REQUIRED FOR EXPOSURE OF THIS DRAWING TO OTHERS FOR ANY PURPOSE.

Drawing Title: HIAB 1055E-8 JIB 175X5 HI-PRO					
Project Name: SALES LAYOUT					
Next Assy.	Drawn by: J W	Date: 3-26-14	Size:	Part No.	
Dwg/Cad file no. 1055 / SALES	Approval:	Date Approved:	Scale:	unit wt.	Eng. job no.: